Unilumin UDA II. The Picture Quality is Just the Beginning

Posted on November 23, 2026

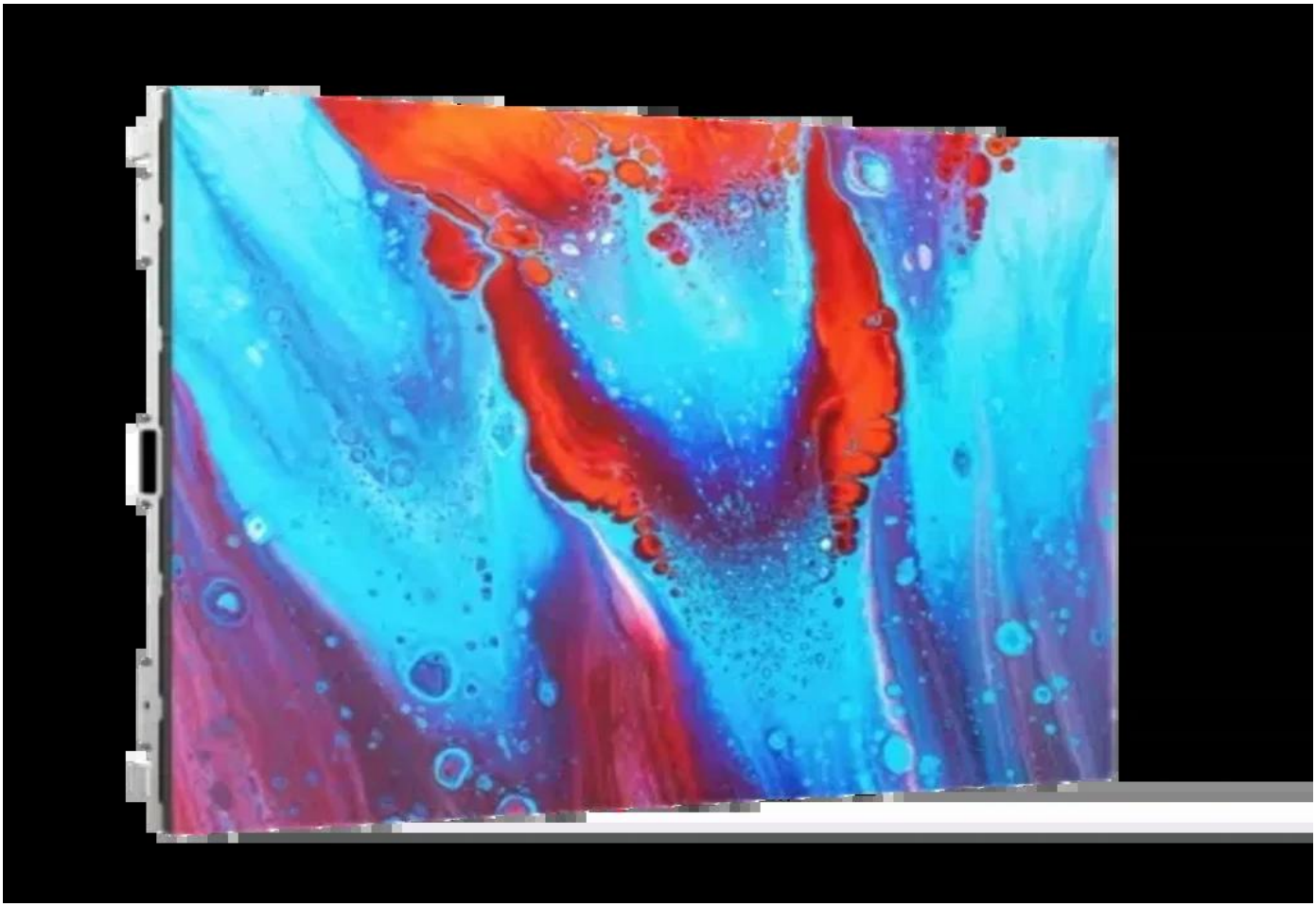

4200Hz High Refresh Rate Indoor Commercial Display

Copyright © DWR Distribution

- SMD: P1.2/1.5/1.8/2/2.5
- COB: P1.2/1.5/1.8
- Worry-free, Unprecedented Stability
- Data & Power Redundancy*
- Anti-collision Design
- Efficient Heat Dissipation

Worry-free, Unprecedented Stability

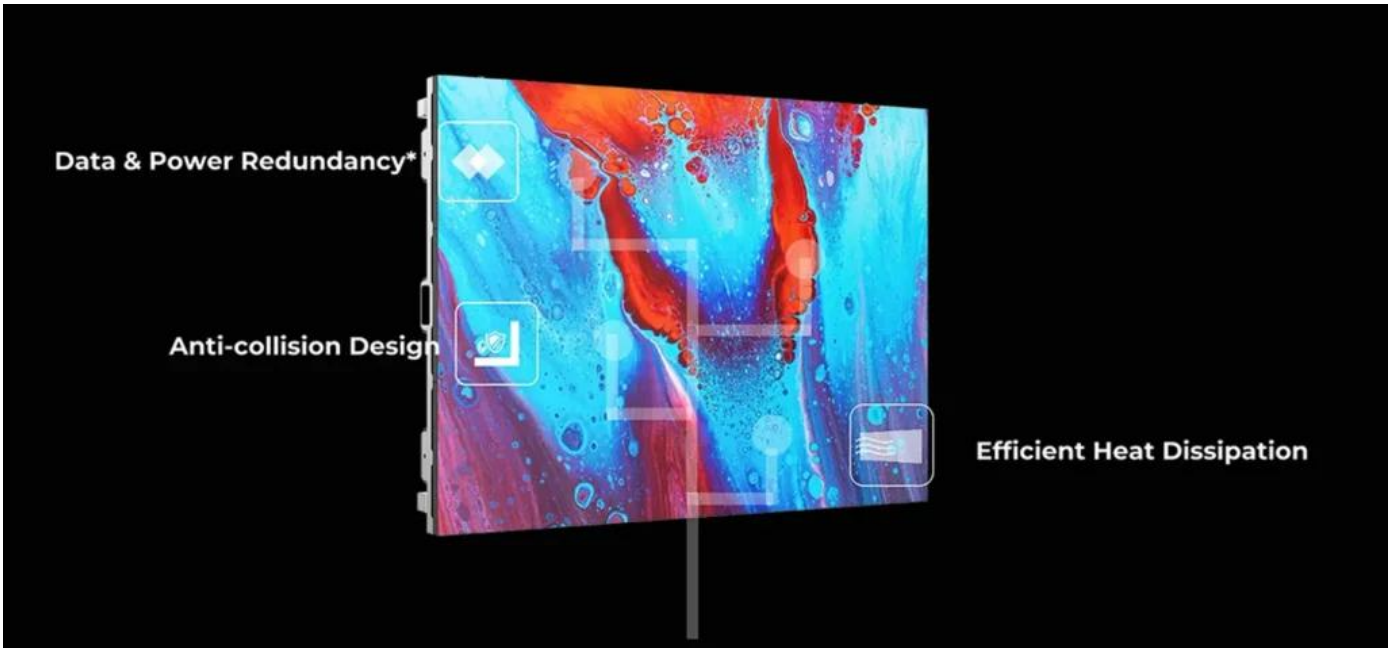

Anti-collision design

Anti-collision design provides comprehensive protection to keep the lamp face, pad, and PBC from damage during delivery and splicing.

Copyright © DWR Distribution

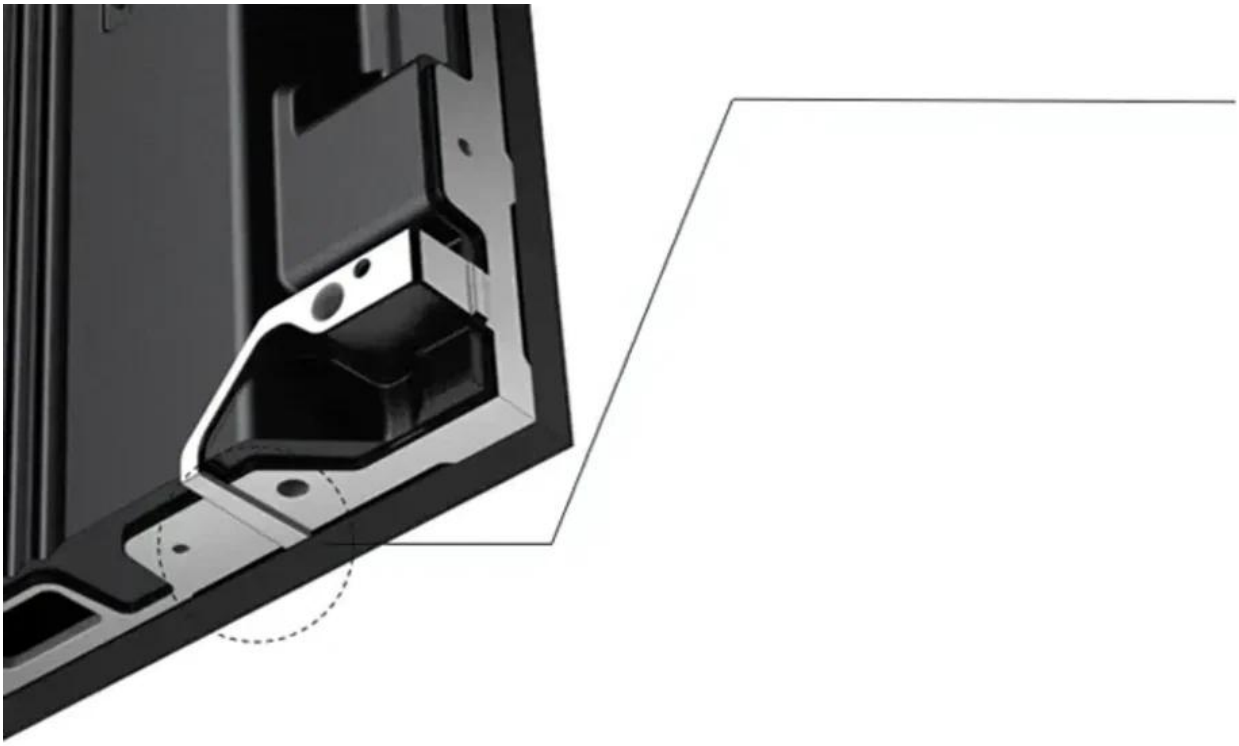

XYZ Axis Adjustment for Perfect Flatness*

High precision dowel pin design for fast positioning

XYZ axis adjustment:flatness≤0.2mm, for smooth display with no scan line

Copyright © DWR Distribution

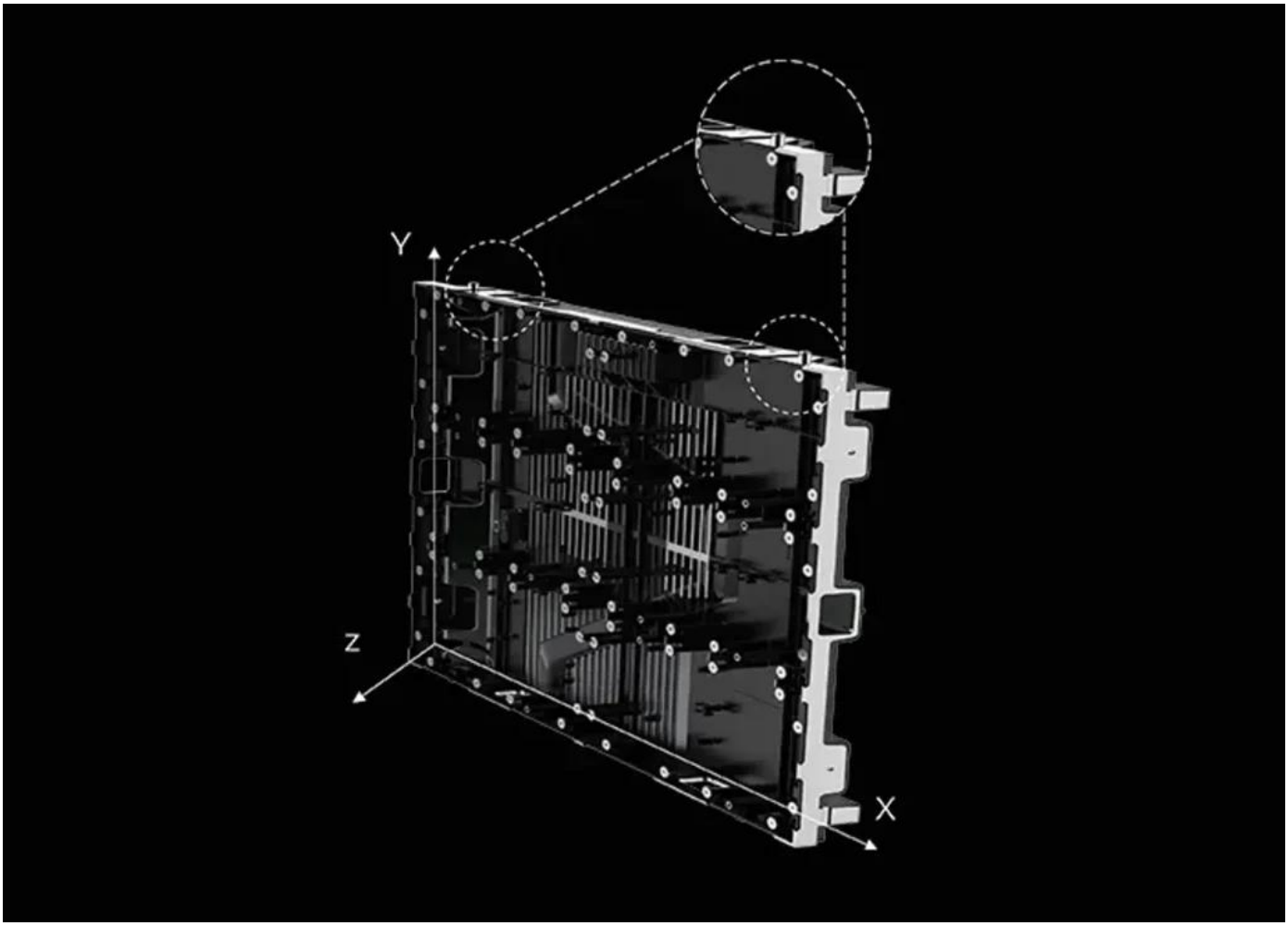

Copyright © DWR Distribution